# USER MANUAL

ENGLISH - VERSION 2

# nando 502

**WASH**

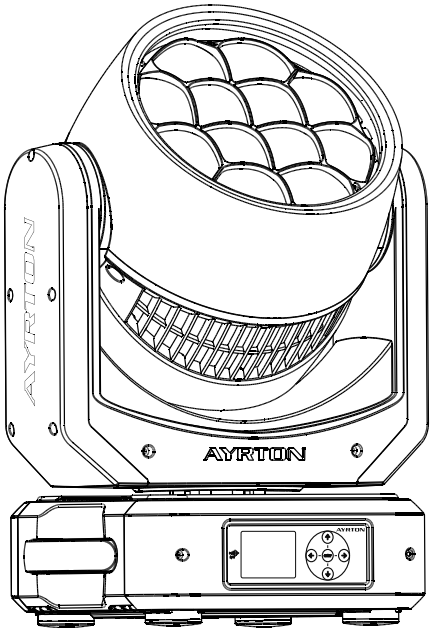


AYRTON

Digital Lighting

SCAN FOR MORE

ayrton.eu

2 Rue de Vitruve,
91140 Villebon-sur-Yvette,
France

## CONTENTS

1. SAFETY INSTRUCTIONS ..... 3

2. FEATURES ..... 4

3. FIXTURE OVERVIEW ..... 4

4. DRAWINGS ..... 4

5. INSTALLATION INSTRUCTIONS ..... 5

6. DMX-512 CONTROL CONNECTION ..... 6

7. DMX-512 CONNECTION WITH DMX TERMINATOR ..... 6

8. DEVICE DMX START ADDRESS SELECTION ..... 6

9. DISPLAY ..... 6

10. NFC ..... 14

11. DMX PROTOCOL ..... 14

12. ERROR MESSAGES ..... 14

13. CLEANING AND MAINTENANCE ..... 14

Keep this manual for future needs.

Errors and omissions for all information given in this user manual are expected.
All information is subject to change without prior notice.

# 1. SAFETY INSTRUCTIONS

## 1.1 › IMPORTANT SAFETY WARNINGS

This device has left the factory in perfect condition. In order to maintain this condition and to ensure safe operation, it is absolutely necessary for the user to follow the safety instructions and warning notes written in this user manual.

In order to install, operate and maintain the lighting fixture safely and correctly we suggest that the installation and operation be carried out by qualified technicians and these instructions be carefully followed.

| CAUTION | |
|---|---|
| | High voltage. Risk of severe or fatal electric shock. |
| | Always disconnect mains supply before removing any fixture covers. |
| | Never look directly into the light source. Sensitive persons may suffer an epileptic shock. |
| | Blue light hazard: risk group 2. |
| | Fixture exposed to salt water should not be stored in its foam insert without being cleaned with fresh water first. It is best practice that fixture bestored dry. |
| | Never touch the device during operation. covers may be hot. |
| | **Warning**: Changes or modifications to this unit not expressly approved by the party responsible for compliance could void the user's authority to operate the equipment.<br><br>**Note:** This equipment has been tested and found to comply with the limits for a class a digital device, pursuant to part 15 of the fcc rules. These limits are designed to provide reasonable protection against harmful interference when the equipment is operated in a commercial environment. This equipment generates, uses and can radiate radio frequency energy and, if not installed and used in accordance with the instruction manual, may cause harmful interference to radio communications. Operation of this equipment in a residential area is likely to cause harmful interference in which case the user will be required to correct the interference at his own expense. |

Damage caused by the disregard of this user manual is not subject to warranty. The dealer and manufacturer will not accept liability for any resulting defects or problems.

Under no circumstances should the fixture be pointed at the sun. Sunlight, combined with the high efficiency lenses used in the product can cause significant damage to the fixture.

Be aware that even when lens is not pointed directly at the sun damage may occur. It is best practice to ensure that the lens is pointed away from the sub, preferably in the opposite direction.

Always dry and clean your fixture before storing it for any length of time.

Never use any abrasive cleaning products on the fixture as this may damage the coating of the fixture impacting its anti-corrosion protection.

- If the device has been exposed to temperature changes due to environmental conditions, do not power on immediately. The resulting condensation could damage the device. Leave the device powered off until it has reached room temperature.
- Ensure the sealing rubber covers of powerCON TrueOne and XLR connectors are fitted properly when the device is not in use, to avoid water ingress.
- This device falls under protection-class I. Therefore, it is essential that the device be earthed.
- If either lenses or display are damaged (damage may include cracks or gashes in the material) they must be replaced.
- Electrical connections, such as replacing the power plug, must be performed by a qualified person.
- Make sure that the available voltage is not higher than that which is stated in this manual.
- Make sure the power cord is never crushed or damaged by sharp edges. If this should be the case, replacement of the cable must be done by an authorized dealer.
- If the external flexible power cord of this device is damaged, it shall be exclusively replaced by the manufacturer or their service agent or a similar qualified person in order to avoid injury.
- Before performing maintenance, always disconnect the device from the mains. Only handle the power cord from the plug. Never pull the plug out of a socket by tugging the power cord.
- When powered on for the first time, some smoke or smell may occur. This is caused by coating on metal parts when heated and is normal. If you are concerned, please contact your distributor.
- Do not focus the beam onto flammable surfaces. The minimum distance between the exiting lens of the device and the illuminated surface must be greater than 1 meter.

**CAUTION**

**Please be aware that damage caused by any modifications to the device are not subject to warranty Keep away from children and non-professionals.**

## 1.2 › GENERAL GUIDELINES

- This device is a lighting effect for professional use on stages, in discotheques, theatres, etc. The device was designed for indoor and outdoor use.
- This fixture is only allowed to be operated within the maximum alternating current as stated in the technical specifications in section 2 of this manual.
- Handle the device with care avoid shaking or using force when installing or maintaining the device.
- If you use the quick lock cam when rigging the device, make sure the quick lock fasteners are located in the quick lock holes correctly and securely.
- Operate the device only after having familiarized yourself with its functions Do not permit operation by persons not qualified for operating the device. Most damage is the result of unprofessional operation.
- Please use the original packaging if the device is to be transported.
- The applicable temperature for the device is between -20 °C to 45 °C. Do not use the device outside of this temperature range.
- The light source contained in this luminaire shall only be replaced by the manufacturer or his service agent or a similar qualified person.

**CAUTION**

**For safety reasons, please be aware that all modifications to the device are forbidden. If this device is operated in any way different**

**to the ones described in this manual, the product may suffer damage and the warranty becomes void. Furthermore, any other operation may lead to short-circuits, burns, electric shocks, etc.**

## 2. FEATURES

**POWER SUPPLY**
- AC100-240 V~, 50/60 Hz
- Power Consumption: 550 W

**OPTICS**
- Beam aperture: 3.5° to 53°
- 210 mm front lens cluster

**LIGHT SOURCE**
- 12 x 40 W RGB-L High-Power LED sources
- CRI: Greater than 86

**MOVEMENT**
- Pan and tilt automatic repositioning
- Range: 540° pan & 270° tilt

**COLOURS**
- Sophisticated 4 colours RGB-L mixing
- Virtual colour wheel, including most usual white colour temperature presets

**EFFECTS**
- 2D & 3D graphical effects capabilities
- Effects can be coupled with beam, wash or matrix applications
- Built-in pattern effects with speed and fade controls for scenic applications
- Individual control of each pixels

**DIMMER / STROBE**
- Electronic dimmer from 0 to 100%
- Strobe effect: 1 to 25 flashes per second

**HARDWARE FEATURES**
- Graphic LCD display with flip function
- 5 menu buttons to set functions
- Integrated wireless LumenRadio™ receiver
- IP65 XLR 5 pin connectors
- IP65 RJ45 connectors
- IP65 PowerCON TRUE1 TOP connectors

**CONTROL**
- DMX 512 protocol
- DMX-RDM compatible
- Stand-alone mod, local control panel
- ArtNet™ & sACN protocol through Ethernet cable
- Choice of 4 DMX modes (26 to 86 DMX channels)

**COOLING SYSTEM**
- Advanced liquid cooling system
- Selectable ventilation user modes
- Excess temperature protection

**HOUSING**
- Skeleton made of aluminium and steel plates
- Base in die-cast aluminium
- Heatsinks in aluminium and copper
- Moulded covers ABS PC (V0 class)
- 2 sides handles for transportation
- 4 heavy-duty feet
- IP65 protection rating (IP66 optional)

**INSTALLATION**
- 2 Omega ¼ turn brackets
- 4 ¼ turn mounting points
- Safety cable attachment point

**OPERATING PARAMETERS**
- Maximum permitted: 45 °C (113 °F)
- Minimum permitted: -20 °C (-4 °F)
- Minimum usage distance: 1 m (3.28 ft)

**COMPLIANCE**
- CE, UKCA, ETL

**SIZE**
- Product: 340 x 474 x 268 mm (l x h x d)
- Foam: 395 x 480 x 335 mm (l x h x d)

**WEIGHT**
- Product: 15.6 kg

## 3. FIXTURE OVERVIEW

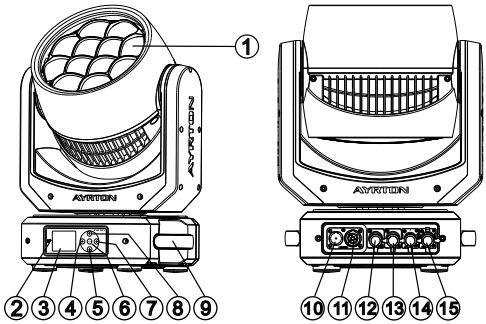


| | | | | | |
|---|---|---|---|---|---|
| 1. | Lenses Assembly | 6. | Center-button | 11. | Power Out |
| 2. | NFC | 7. | Right-button | 12. | RJ45 In |
| 3. | Display | 8. | Up-button | 13. | RJ45 Out |
| 4. | Left-button | 9. | Handle | 14. | DMX In |
| 5. | Down-button | 10. | Power In | 15. | DMX Out |

## 4. DRAWINGS

### 4.1 > FIXTURE DIMENSION

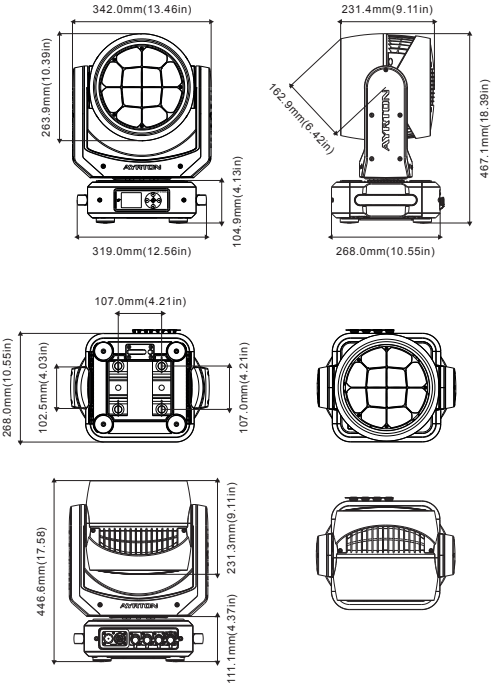


# 5. INSTALLATION INSTRUCTIONS

## 5.1 › RIGGING THE DEVICE

**CAUTION**

**Please consider the respective national norms during the installation. The installation must only be carried out by a qualified person**

- The installation of the support structure has to be built and constructed in a way that it can hold 10 times the weight for 1 hour without any harming deformation.
- The installation must always be secured with a secondary safety attachment, e.g. an appropriate safety rope.
- Never stand directly below the device when mounting, removing or servicing the fixture.
- The operator has to make sure the safety relating and machine technical installations are approved by an expert before taking the device into operation for the first time.
- These installations have to be approved by a skilled person once a year.
- Overhead mounting requires extensive experience, including amongst others calculating working load limits, installation material being used, and periodic safety inspection of all installation material and the device. If you lack these qualifications, do not attempt the installation yo urself. Improper installation can result in bodily injury.

## 5.2 › RIGGING USING THE OMEGA BRACKETS

**CAUTION**

**This step is very important to ensure safe rigging of the fixture.**

- Fix the clamp to the bracket by tightening the M12 nut and bolt to the bracket through the Φ13 hole in the middle of the bracket.
- Insert the quick lock fasteners of the first Omega holder into the respective holes on the bottom of the device. Tighten the quick lock fasteners fully clockwise.
- Install the second Omega holder.
- Pull the safety cable through the holes on the bottom of the base and over the trussing system or another suitable rigging point.

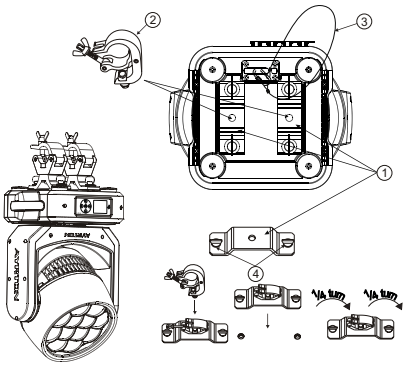


1. Omega bracket
2. Clamp
3. Safety rope
4. Quick-lock fastener

## 5.3 › RIGGING DRAWINGS

**CAUTION**

**Overhead rigging requires extensive experience, including (but not limited to) calculating working load limits, specifying installation/ rigging materials, and periodic safety inspection of all installation material as well as the device If you lack these qualifications, do not attempt the rigging of this device yourself. Improper installation/ rigging can result in serious bodily injury**

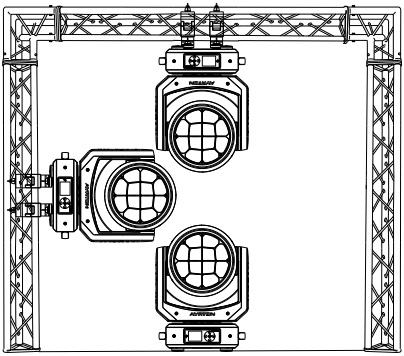

- Be sure this fixture is kept at least 0.1 m away from any flammable materials (decoration etc.).
- Always use and install a supplied safety cable as a safety measure to prevent accidental damage and/or injury in the event the clamp fails.
- Rig the projector high enough to provide clearance for people who may walk beneath the beam path or establishing a restricted access area that extends beyond the beam hazard distance.
- **WARNING! Please DO NOT let other external intense lights to shine through the fixture front lens, it may cause significant internal damages!**
- When install fixture outdoor at day time (with power off), please make sure that the fixture front lens is NOT facing the sun.
- When use fixture outdoor at day time (with power on), please avoid fixture front lens facing the sun.

- When fixture is on standby outdoor at day time (with power ON and no DMX signal), please make sure the "sun protection" mode is ON (default).

## 6. DMX-512 CONTROL CONNECTION

Connect the male side of the XLR cable to the female XLR output of your controller and the female side of the XLR cable to the male XLR input of the device You can connect multiple devices together in a serial fashion The cable needed should be two core, screened cable with XLR input and output connectors. Please refer to the diagram below.

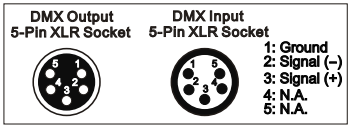


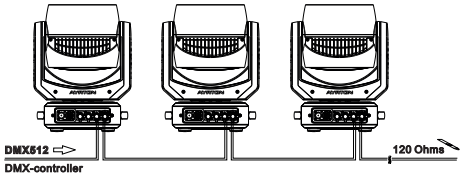


## 7. DMX-512 CONNECTION WITH DMX TERMINATOR

For installations where the DMX cable has to run over a long distance or is in an electrically noisy environment, such as in a discotheque, it is recommended to use a DMX terminator. This helps in preventing corruption of the digital control signal caused by electrical noise. The DMX terminator is an XLR plug with a 120 Ω resistor connected between pins 2 and 3, which is then plugged into the output (female) XLR socket of the last fixture in the chain.

Please see illustrations below.

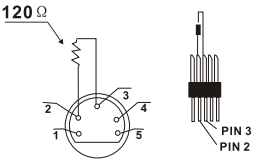


## 8. DEVICE DMX START ADDRESS SELECTION

All fixtures should be given a DMX starting address when using a DMX signal, so that the correct fixture responds to the correct control signals This digital starting address is the channel number from which the fixture starts to "listen" to the digital control information sent out from the DMX controller. The allocation of this starting address is achieved by setting the correct address number on the display located on the base of the device.

You can set the same starting address for all fixtures or a group of fixtures, or set different addresses for each fixture individually.

If you set the same address on all devices, all the devices will start to "listen" to the same control signal from the same channel number In other words, changing the settings of one channel will affect all the fixtures simultaneously.

If you set a different address, each unit will start to "listen to" the channel number you have set, based on the quantity of control channels of the unit. That means changing the settings of one channel will affect only the selected device.

In the case of the LED moving head, in 86 channel mode, you should set the starting address of the first unit to 1, the second unit to 87 (86+1), and the third unit 173 (86+87) and so on.

## 9. DISPLAY

- The LCD display with buttons is for addressing, special functions & parameters settings, local control, information query and etc...
- The main menu is accessed by double clicking enter button until the display starts flashing.
- Browse through the menu by pressing ⌃, ⌄, < or > button.
- Press enter for 2 seconds in order to exit menu, double click enter for confirm. After accessing the edit mode, the unit will automatically exit to the main menu after 15 seconds from the last button press.
- When the unit is powered on if no data signal is connected after 1 minute then the display will switch off automatically.

### DEFAULT SETTINGS SHADED

| | | |
|---|---|---|
| **Address** | | |
| **Main** | DMX Address: XXX<br>Decimal Universe: XXXXX<br>Net: XX<br>Sub-Net: XX<br>Universe: X<br>Signal | DMX Address<br>Decimal Universe<br>Net<br>Sub-Net<br>Universe<br>DMX/WDMX/Art-Net/sACN |
| **Effect** | FollowMain<br>DMX Address: XXX<br>Decimal Universe: XXXXX<br>Net: XX<br>Sub-Net: X<br>Universe: X<br>Signal | ON/OFF<br>DMX Address<br>Decimal Universe<br>Net<br>Sub-Net<br>Universe<br>DMX/WDMX/Art-Net/sACN |
| **Pwr LED Pix** | FollowMain<br>DMX Address:xxx<br>Decimal Universe:xxxxx<br>Net:xx<br>Sub-Net:x<br>Universe:x<br>Signal | ON/OFF<br>DMX Address<br>Decimal Universe<br>Net<br>Sub-Net<br>Universe<br>DMX/WDMX/Art-Net/sACN |
| **Mode** | | |
| **User Mode** | Stand Mode<br>Basic Mode<br>Extend Ring<br>Extend Pixel<br>User Mode A<br>User Mode B<br>User Mode C | User's mode to change channel numbers |
| **Edit User Mode A/B/C** | Max channel<br>PAN: | Preset User modes A,B,C<br>. |

| | | | |
|---|---|---|---|
| **Options** | | | |
| **Status** | No DMX Mode<br>Sun Protection<br>Pan Reverse<br>Tilt Reverse<br>Pan Degree<br>Feedback<br>Init PAN<br>Init TILT<br>Pan/Tilt Spd<br>Hibernation<br>DMX Output | Close/Hold/Auto<br>ON/OFF<br>ON/OFF<br>ON/OFF<br>630/540<br>ON/OFF<br>ON/OFF<br>ON/OFF<br>Fast/Medium/Slow<br>OFF, 01M ~ 99M<br>ON/OFF | Auto run if no DMX<br>Sun Protection<br>Pan Reverse movement<br>Tilt Reverse movement<br>Pan Degree Select<br>Movement Feedback<br>Init PAN<br>Init TILT<br>Movement Speed<br>Standby Mode<br>DMX Output |
| **Service PIN** | Service PIN<br>RDM UID<br>Set IP<br>Reset From MAC<br>Set Mask<br>DHCP<br>Cross Load SW<br>Clr LED Timer<br>Clr Error Info<br>Set LED BIN | Password = XXX<br>Xxxxxx<br>xxx.xxx.xxx.xxx<br>ON/OFF<br>xxx.xxx.xxx.xxx<br>ON/OFF<br>ON/OFF<br>ON/OFF<br>ON/OFF<br>Cl4... | Service Password"=050"<br>RDM IUD<br>Set IP<br>Reset From Mac<br>Set Mask<br>DHCP<br>Cross Load SW<br>Clr LED Timer<br>Clr LED Timer<br>Set LED BIN |
| **Fans Control** | Fans Speed | Auto<br>Stage<br>Silence<br>Super Silence | Fans Speed select |
| | Constant Fans | ON/OFF | Constant Fans |
| **Disp.Setting** | Shutoff Time<br>Flip Display<br>Key Lock<br>DispFlash | 02~60m 05m<br>ON/OFF<br>ON/OFF<br>ON/OFF | Display shutoff time<br>Reverse 180 degree<br>Key Lock<br>DispFlash |
| **Temp. C/F** | Celsius<br>Fahrenheit | | Temperature switch between °C/°F |
| **Initial Pos.** | PAN =XXX | | Initial effect position |
| **Dim Curve** | Square Law<br>Linear | | Dime Curve |
| **IP From Mac** | ON/OFF | | IP From Mac |
| **Refresh Select** | 1.2K<br>2.4K<br>16K<br>25K | | Refresh Select |
| **Defog** | OFF/Auto/ON | | Defog |
| **Trigger** | DMX Value Disp.<br>Set to Follow<br>Auto Program | PAN.....<br>Follow 1, Follow 2, Follow 3<br>Main/Alone | DMX Value Disp.<br>Set to Follow<br>Auto Program |
| **Reset Default** | ON/OFF | | Restore factory set. |
| **Reset User** | Address | ... the same as menu Address below | DMX address setting |
| | Mode | Stand Mode<br>Basic Mode<br>Extend Mode<br>User Mode A<br>User Mode B<br>User Mode C | User's mode<br>to change<br>channel numbers |
| | Fans Speed | Auto<br>Stage<br>Silence<br>Super Silence | Fans Speed select |
| | Constant Fans | ON/OFF | Constant Fans |
| **Info** | | | |
| **Time Info.** | Current Time<br>Ttl Life Hrs<br>Last Run Hrs<br>LED Hours<br>Timer PIN<br>Clr Last Run | | XXXX(Hours)<br>XXXX(Hours)<br>XXXX(Hours)<br>XXXX(Hours)<br>Password = XXX<br>ON/OFF |
| **Temp. Info** | XXX°C/°F | | Temp. Info |
| **Humidity** | x% | | Humidity |
| **Fan Info.** | xxxx RPM | | Fan information |
| **Software Ver** | V1.0..... | | Software version |

| | | | |
|---|---|---|---|
| **Info** | | | |
| **Network** | IP, Mask, Mac | | Network |
| **Error Info.** | Error Record 1<br>: | | Error Info. |
| **SN** | xxxxx... | | SN |
| **Test** | | | |
| **Home** | All<br>Pan&Tilt<br>ZOOM | | Reset All<br>Reset Pan&Tilt<br>ZOOM |
| **Test Channel** | PAN ..... | | Test function |
| **Manual Ctrl.** | PAN =XXX<br>: | | Fine adjustment of the lamp |
| **Calibration** | -Password-<br>PAN<br>: | | Password "050"<br>Calibrate and adjust the effects to standard/right position |
| **Preset** | | | |
| **Select Prog.** | Prog. Part 1 = Program 1 ~ 10 Program 1<br>Prog. Part 2 = Program 1 ~ 10 Program 2<br>Prog. Part 3 = Program 1 ~ 10 Program 3 | | Select programs to be run |
| **Edit Prog.** | Program 1<br>:<br>Program 10 | Program Test<br>Step 01=SCxxx<br>Step 64=SCxxx | Testing program<br>Program in loop<br>Save and exit |
| **Edit Scenes** | Edit Scene 001<br>~ Edit Scene 250 | Pan,Tilt,.....<br>--Fade Time--<br>--Scene Time--<br>Input By Outside | Save and automatically return manual scenes edit |
| **Scenes Input** | XX~XX | | Scenes Input |

## 9.1 ADDRESS

### 9.1.1. Main

***With this function, you can adjust the desired DMX-address via the Display.***

- Double clicking center button to access main menu.
- Tap the ‹Up/Down› button until "Address" is displayed.
- Double clicking center button to access "Address". Tap the ‹Up/Down› button to select "Main".
- Double clicking center button to access "Main" menu. The display will show "DMX Address: xxx", "Decimal Universe: xxxxx", "Net: xx", "Sub-Net: x", "Universe: x", "Signal".
- Double click the center button to confirm or long press the center button to return to the main menu.

### 9.1.2. Effect

- Double clicking center button to access main menu.
- Tap the ‹Up/Down› button until "Address" is displayed.
- Double clicking center button to access "Address". Tap the ‹Up/Down› button to select "Effect".
- Double clicking center button to access "Effect" menu. The display will show "FollowMain", "DMX Address: xxx", "Decimal Universe: xxxxx", "Net: xx", "Sub-Net: x", "Universe: x", "Signal".
- Double click the center button to confirm or long press the center button to return to the main menu.

### 9.1.3. Pwr LED pix

- Double clicking center button to access main menu.
- Tap the ‹Up/Down› button until "Address" is displayed.
- Double clicking center button to access "Address"
- Tap the ‹Up/Down› button to select "Pwr led pix".
- Double clicking center button to access "Pwr LED pix" menu. The display will show "FollowMain", "DMX Address: xxx", "Decimal Universe: xxxxx", "Net: xx", "Sub-Net: x", "Universe: x", "Signal".
- Double click the center button to confirm or long press the center button to return to the main menu.

## 9.2 MODE

### 9.2.1. User Mode

***With this function, you can create user defined channel orders.***

- Double clicking center button to access main menu; Tap the ‹Up/Down› button until "Mode" is displayed. Double clicking center button to enter.
- Press ‹Up/Down›, the display will show "User Mode".
- Double clicking center button to enter.
- When in "Extend Mode", press ‹Up/Down› button to select "Basic Mode", "Stand Mode", "Extend Ring", "Extend Pixel", "User Mode A", "User Mode B" and "User Mode C".
- Double click the center button to confirm or long press the center button to return to the main menu.

### 9.2.2. Edit User Mode

***With this function, you can adjust the rest user defined channel order.***

- Double clicking center button to access main menu; Tap the ‹Up/Down› button until "Mode" is displayed. Double clicking center button to enter.
- Press ‹Up/Down›, the display will show "Edit User Mode".
- Double clicking center button to enter.
- Set up "Max Channel=xxx" and select channel value.
- Set up "Mode B" and "Mode C" by the same way.
- Double click the center button to confirm or long press the center button to return to the main menu.

## 9.3 OPTIONS

### 9.3.1. Status

**No DMX Status**

***With this function, you can choose the unit behavior in case no signal is detected between Close, Hold, and Auto.***

- Double clicking center button to access main menu.
- Tap the ‹Up/Down› button until "Options" is displayed.
- Double clicking center button to access "Options". Tap the ‹Up/Down› button to select "Status".
- Double clicking center button to access "Status" menu. Tap the ‹Up/Down› button to select "No DMX Status".
- Double clicking center button to access "No DMX Status". The display will show "Hold". Tap the ‹Up/Down› button to select "Close", "Auto".
- Double click the center button to confirm or long press the center button to return to the main menu.

**Sun Protection**

***When this function is activated, the unit will automatically tilt down its head toward the ground when no signal is detected***

- Double clicking center button to access main menu.
- Tap the ‹Up/Down› button until "Options" is displayed.
- Double clicking center button to access "Options". Tap the ‹Up/Down› button to select "Status".
- Double clicking center button to access "Status" menu. Tap the ‹Up/Down› button to select "Sun Protection".
- Double clicking center button to access "Sun Protection". The display will show "OFF"
- Tap the ‹Up/Down› button to select "ON".
- Double click the center button to confirm or long press the center button to return to the main menu.

**Pan Reverse**

***With this function you can reverse the Pan-movement.***

- Double clicking center button to access main menu.
- Tap the ‹Up/Down› button until "Options " is displayed.
- Double clicking center button to access "Options". Tap the ‹Up/Down› button to select "Status".
- Double clicking center button to access "Status" menu. Tap the ‹Up/Down› button to select "Pan Reverse".
- Double clicking center button to access "Pan Reverse". The display will show "OFF".
- Tap the ‹Up/Down› button to select "NO".
- Double click the center button to confirm or long press the center button to return to the main menu.

**Tilt Reverse**

***With this function you can reverse the Tilt-movement.***

- Double clicking center button to access main menu.
- Tap the ‹Up/Down› button until "Options" is displayed.
- Double clicking center button to access "Options". Tap the ‹Up/Down› button to select "Status".
- Double clicking center button to access "Status" menu. Tap the ‹Up/Down› button to select "Tilt Reverse".
- Double clicking center button to access "Tilt Reverse". The display will show "OFF"; Tap the ‹Up/Down› button to select "NO".
- Double click the center button to confirm or long press the center button to return to the main menu.

**Pan Degree**

***With this function, you can select pan degree for 630 or 540.***

- Double clicking center button to access main menu.
- Tap the ‹Up/Down› button until "Options" is displayed.
- Double clicking center button to access "Options". Tap the ‹Up/Down› button to select "Status".
- Double clicking center button to access "Status" menu. Tap the ‹Up/Down› button to select "Pan Degree".
- Double clicking center button to access "Pan Degree". The display will show "540". Tap the ‹Up/Down› button to select "630".
- Double click the center button to confirm or long press the center button to return to the main menu.

**Feedback**

***This function allows you to activate or deactivate the automatic repositioning of the Pan & Tilt in case of an accidental/manual move of the yoke.***

- Double clicking center button to access main menu.
- Tap the ‹Up/Down› button until "Options" is displayed.
- Double clicking center button to access "Options". Tap the ‹Up/Down› button to select "Status".
- Double clicking center button to access "Status" menu. Tap the ‹Up/Down› button to select "Feedback".
- Double clicking center button to access "Feedback". The display will show "ON". Tap the ‹Up/Down› button to select "OFF".
- Double click the center button to confirm or long press the center button to return to the main menu.

**Init PAN**

***With this function, you can feedback switch of pan movement or tilt movement.***

- Double clicking center button to access main menu.
- Tap the ‹Up/Down› button until "Options" is displayed.
- Double clicking center button to access "Options". Tap the ‹Up/Down› button to select "Status".
- Double clicking center button to access "Status" menu. Tap the ‹Up/Down› button to select "Init PAN".
- Double clicking center button to access "Init PAN". The display will show "ON". Tap the ‹Up/Down› button to select "OFF".
- Double click the center button to confirm or long press the center button to return to the main menu.

**Init TILT**

***This function allows you to deactivate the Tilt movement.***

- Double clicking center button to access main menu.
- Tap the ‹Up/Down› button until "Options" is displayed.
- Double clicking center button to access "Options". Tap the ‹Up/Down› button to select "Status".
- Double clicking center button to access "Status" menu. Tap the ‹Up/Down› button to select "Init TILT".

- Double clicking center button to access “Init TILT”. The display will show “ON”. Tap the ‹Up/Down› button to select “OFF”.
- Double click the center button to confirm or long press the center button to return to the main menu.

**Pan/Tilt Spd**

***With this function, you can select Pan & Tilt speed from “Fast”, “Medium”, “Slow.***

- Double clicking center button to access main menu.
- Tap the ‹Up/Down› button until “Options” is displayed.
- Double clicking center button to access “Options”. Tap the ‹Up/Down› button to select “Status”.
- Double clicking center button to access “Status” menu. Tap the ‹Up/Down› button to select “Pan/Tilt Spd”.
- Double clicking center button to access “Pan/Tilt Spd”. The display will show “Fast”. Tap the ‹Up/Down› button to select “Fast”, “Medium”, “Slow”.
- Double click the center button to confirm or long press the center button to return to the main menu.

**Hibernation**

***The device and stepper motors will be powered off if the unit stays without DMX signal for 15 mins (Factory default). The fixture will perform a reset sequence once DMX is back.***

- Double clicking center button to access main menu.
- Tap the ‹Up/Down› button until “Options” is displayed.
- Double clicking center button to access “Options”. Tap the ‹Up/Down› button to select “Status”.
- Double clicking center button to access “Status” menu. Tap the ‹Up/Down› button to select “Hibernation”.
- Double clicking center button to access “Hibernation”. The display will show “OFF”. Tap the ‹Up/Down› button to select “01M”, “02M” . . . “99M”.
- Double click the center button to confirm or long press the center button to return to the main menu.

**DMX Output**

- Double clicking center button to access main menu.
- Tap the ‹Up/Down› button until “Options” is displayed.
- Double clicking center button to access “Options”. Tap the ‹Up/Down› button to select “Status”.
- Double clicking center button to access “Status” menu. Tap the ‹Up/Down› button to select “DMX Output”.
- Double clicking center button to access “DMX Output”. The display will show “OFF”. Tap the ‹Up/Down› button to select “ON”.
- Double click the center button to confirm or long press the center button to return to the main menu.

### 9.3.2. Service PIN

**Password**

***The Password for this function is“050”.***

**RDM UID**

- Double clicking center button to access main menu.
- Tap the ‹Up/Down› button until “Options” is displayed.
- Double clicking center button to access “Options”. Tap the ‹Up/Down› button to select “Service PIN”.
- Double clicking center button to access “Service PIN” menu. Tap the ‹Up/Down› button to select “RDM UID”.
- Double clicking center button to access “RDM UID”. The display will show “Xxxxxx”.
- Double click the center button to confirm or long press the center button to return to the main menu.

**Set IP**

- Double clicking center button to access main menu.
- Tap the ‹Up/Down› button until “Options” is displayed.
- Double clicking center button to access “Options”. Tap the ‹Up/Down› button to select “Service PIN”.
- Double clicking center button to access “Service PIN” menu. Tap the ‹Up/Down› button to select “Set IP”.
- Double clicking center button to access “Set IP”. The display will show “XXX.XXX.XXX.XXX”.
- Double click the center button to confirm or long press the center button to return to the main menu.

**Set Mask IP**

- Double clicking center button to access main menu.
- Tap the ‹Up/Down› button until “Options” is displayed.
- Double clicking center button to access “Options”. Tap the ‹Up/Down› button to select “Service PIN”.
- Double clicking center button to access “Service PIN” menu. Tap the ‹Up/Down› button to select “Set Mask IP”.
- Double clicking center button to access “Set Mask IP”. The display will show “XXX.XXX.XXX.XXX”.
- Double click the center button to confirm or long press the center button to return to the main menu.

**DHCP**

- Double clicking center button to access main menu.
- Tap the ‹Up/Down› button until “Options” is displayed.
- Double clicking center button to access “Options”. Tap the ‹Up/Down› button to select “Service PIN”.
- Double clicking center button to access “Service PIN” menu. Tap the ‹Up/Down› button to select “DHCP”.
- Double clicking center button to access “DHCP”. The display will show “OFF”.
- Tap the ‹Up/Down› button to select “ON”.
- Double click the center button to confirm or long press the center button to return to the main menu.

**Cross Load SW**

***This function allows you to upload the current SW version to other units using a DMX connection. Do not disconnect the units before the process is done***

- Double clicking center button to access main menu.
- Tap the ‹Up/Down› button until “Options” is displayed.
- Double clicking center button to access “Options”. Tap the ‹Up/Down› button to select “Service PIN”.
- Double clicking center button to access “Service PIN” menu. Tap the ‹Up/Down› button to select “Cross Load SW”.
- Double clicking center button to access “Cross Load SW”. The display will show “OFF”. Tap the ‹Up/Down› button to select “ON”.
- Double click the center button to confirm or long press the center button to return to the main menu.

**Clr LED Timer**

- Double clicking center button to access main menu.
- Tap the ‹Up/Down› button until “Options” is displayed.
- Double clicking center button to access “Options”. Tap the ‹Up/Down› button to select “Service PIN”.
- Double clicking center button to access “Service PIN” menu. Tap the ‹Up/Down› button to select “Clr LED Timer”.
- Double clicking center button to access “Clr LED Timer”. The display will show “OFF”. Tap the ‹Up/Down› button to select “ON”.
- Double click the center button to confirm or long press the center button to return to the main menu.

**Clr Error Info**

- Double clicking center button to access main menu.
- Tap the ‹Up/Down› button until “Options” is displayed.
- Double clicking center button to access “Options”. Tap the ‹Up/Down› button to select “Service PIN”.
- Double clicking center button to access “Service PIN” menu. Tap

the ‹Up/Down› button to select "Clr Error Info".

- Double clicking center button to access "Clr Error Info". The display will show "OFF". Tap the ‹Up/Down› button to select "ON".
- Double click the center button to confirm or long press the center button to return to the main menu.

**Set LED BIN**

- Double clicking center button to access main menu.
- Tap the ‹Up/Down› button until "Options" is displayed.
- Double clicking center button to access "Options". Tap the ‹Up/Down› button to select "Service PIN".
- Double clicking center button to access "Service PIN" menu. Tap the ‹Up/Down› button to select "Set LED BIN".
- Double clicking center button to access "Set LED BIN". The display will show "C14", "...".
- Double click the center button to confirm or long press the center button to return to the main menu.

### 9.3.3. Fans Control

**Fans Speed**

***With this function, you can set the fans speed. Settings are Auto, Stage, Silence, and Super Silence.***

- Double clicking center button to access main menu.
- Tap the ‹Up/Down› button until "Options" is displayed.
- Double clicking center button to access "Options". Tap the ‹Up/Down› button to select "Fans Control".
- Double clicking center button to access "Fans Control" menu. Tap the ‹Up/Down› button to select "Fans Speed".
- Double clicking center button to access "Fans Speed". The display will show "Auto". Tap the ‹Up/Down› button to select "Stage", "Silence", "Super Silence".
- Double click the center button to confirm or long press the center button to return to the main menu.

**Constant Fans**

***Allows you to choose that the fans run continuously even when the LED is off***

- Double clicking center button to access main menu.
- Tap the ‹Up/Down› button until "Options" is displayed.
- Double clicking center button to access "Options. Tap the ‹Up/Down› button to select "Fans Control".
- Double clicking center button to access "Fans Control" menu. Tap the ‹Up/Down› button to select "Constant Fans".
- Double clicking center button to access "Constant Fans". The display will show "OFF". Tap the ‹Up/Down› button to select "ON".
- Double click the center button to confirm or long press the center button to return to the main menu.

### 9.3.4. Disp. Setting

**Shut off Time**

***With this function, you can select the delay before the LCD display turns off. Choose between 2 to 60 minutes. The default is 5 minutes***.

- Double clicking center button to access main menu.
- Tap the ‹Up/Down› button until "Options" is displayed.
- Double clicking center button to access "Options". Tap the ‹Up/Down› button to
- select "Display Setting".
- Double clicking center button to access "Display Setting" menu. Tap the ‹Up/Down› button to select "Shut off Time".
- Double clicking center button to access "Shut off Time". The display will show "05m". Tap the ‹Up/Down› button to select "02~60m".
- Double click the center button to confirm or long press the center button to return to the main menu.

**Flip Display**

***With this function you can rotate the display by 180° (when the unit is rigged)***

- Double clicking center button to access main menu.
- Tap the ‹Up/Down› button until "Options" is displayed.
- Double clicking center button to access "Options". Tap the ‹Up/Down› button to select "Display Setting".
- Double clicking center button to access "Display Setting" menu. Tap the ‹Up/Down› button to select "Flip Display".
- Double clicking center button to access "Flip Display". The display will show "OFF". Tap the ‹Up/Down› button to select "ON".
- Double click the center button to confirm or long press the center button to return to the main menu.

**Key Lock**

***With this function you can activate the automatic key lock function. If this function is activated, the keys will be locked automatically after exiting the edit mode for 15 seconds. Keeping press the ‹MODE/ESC› key for 3 seconds if you do not need this function.***

- Double clicking center button to access main menu.
- Tap the ‹Up/Down› button until "Options" is displayed.
- Double clicking center button to access "Options". Tap the ‹Up/Down› button to select "Display Setting".
- Double clicking center button to access "Display Setting" menu. Tap the ‹Up/Down› button to select "Key Lock".
- Double clicking center button to access "Key Lock". The display will show "OFF". Tap the ‹Up/Down› button to select "ON".
- Double click the center button to confirm or long press the center button to return to the main menu.

**DispFlash**

***With this function activated, display will flash if no signal is detected.***

- Double clicking center button to access main menu.
- Tap the ‹Up/Down› button until "Options" is displayed.
- Double clicking center button to access "Options". Tap the ‹Up/Down› button to select "Display Setting".
- Double clicking center button to access "Display Setting" menu. Tap the ‹Up/Down› button to select "DispFlash".
- Double clicking center button to access "DispFlash". The display will show "OFF". Tap the ‹Up/Down› button to select "ON".
- Double click the center button to confirm or long press the center button to return to the main menu.

### 9.3.5. Temperature C/F

***With this function you can display the temperature in Celsius or Fahrenheit.***

- Double clicking center button to access main menu.
- Tap the ‹Up/Down› button until "Options" is displayed.
- Double clicking center button to access "Options". Tap the ‹Up/Down› button to select "Temperature C/ F".
- Double clicking center button to access "Temperature C/ F". The display will show "Celsius". Tap the ‹Up/Down› button to select "Fahrenheit".
- Double click the center button to confirm or long press the center button to return to the main menu.

### 9.3.6. Initial Pos.

***With this function you can display initial effect position.***

- Double clicking center button to access main menu.
- Tap the ‹Up/Down› button until "Options" is displayed.
- Double clicking center button to access "Options". Tap the ‹Up/Down› button to select "Initial Pos.".
- Double clicking center button to access "Initial Pos.". The display will show "PAN=XXX".
- Double click the center button to confirm or long press the center button to return to the main menu.

### 9.3.7. Dim Curve

- Double clicking center button to access main menu.

- Tap the ‹Up/Down› button until "Options" is displayed.
- Double clicking center button to access "Options". Tap the ‹Up/Down› button to select "Dim Curve".
- Double clicking center button to access "Dim Curve". The display will show "Square Law". Tap the ‹Up/Down› button to select "Linear".
- Double click the center button to confirm or long press the center button to return to the main menu.

### 9.3.8. IP From Mac

- Double clicking center button to access main menu.
- Tap the ‹Up/Down› button until "Options" is displayed.
- Double clicking center button to access "Options". Tap the ‹Up/Down› button to select "IP From Mac".
- Double clicking center button to access "IP From Mac". The display will show "OFF". Tap the ‹Up/Down› button to select "ON".
- Double click the center button to confirm or long press the center button to return to the main menu.

### 9.3.9. Refresh Select

***With this function you can select the PWM rate.***

- Double clicking center button to access main menu.
- Tap the ‹Up/Down› button until "Options" is displayed.
- Double clicking center button to access "Options". Tap the ‹Up/Down› button to select "Refresh Select".
- Double clicking center button to access "Refresh Select". The display will show "1.2K". Tap the ‹Up/Down› button to select "2.4K", "16K", "25K".
- Double click the center button to confirm or long press the center button to return to the main menu.

### 9.3.10. Defog

***When this function activated, head fans will run continuously to help removing the potential condensation.***

- Double clicking center button to access main menu.
- Tap the ‹Up/Down› button until "Options" is displayed.
- Double clicking center button to access "Options". Tap the ‹Up/Down› button to select "Defog".
- Double clicking center button to access "Defog". The display will show "AUTO". Tap the ‹Up/Down› button to select "OFF", "ON".
- Double click the center button to confirm or long press the center button to return to the main menu.

### 9.3.11. Trigger

**DMX Value Disp.**

***With this function you can display the DMX 512 value of each channel. The display automatically shows the channel with a value changing.***

- Double clicking center button to access main menu.
- Tap the ‹Up/Down› button until "Options" is displayed.
- Double clicking center button to access "Options". Tap the ‹Up/Down› button to select "Trigger".
- Double clicking center button to access "Trigger" menu. Tap the ‹Up/Down› button to select "DMX Value Disp".
- Double clicking center button to access "DMX Value Disp". The display will show "PAN=.....".
- Double click the center button to confirm or long press the center button to return to the main menu.

**Set To Follow**

***With this function, you can define the device as follow.***

- Double clicking center button to access main menu.
- Tap the ‹Up/Down› button until "Options" is displayed.
- Double clicking center button to access "Options". Tap the ‹Up/Down› button to select "Trigger".
- Double clicking center button to access "Trigger" menu. Tap the ‹Up/Down› button to select "Set To Follow". Double clicking center button to access "Set To Follow". The display will show "Follow1", "Follow2", "Follow3".
- Double click the center button to confirm or long press the center button to return to the main menu.

**Auto Program**

With this function, you can run the internal program. You can select the desired program under "Select program". You can set the number of steps under "Edit program". You can edit the individual scenes under "Edit scenes". With this function, you can run the individual scenes either automatically, i.e. with the adjusted Step-Time.

- Double clicking center button to access main menu.
- Tap the ‹Up/Down› button until "Options" is displayed.
- Double clicking center button to access "Options". Tap the ‹Up/Down› button to select "Trigger".
- Double clicking center button to access "Trigger" menu. Tap the ‹Up/Down› button to select "Auto Program".
- Double clicking center button to access "Auto Program". The display will show "Main", "Alone".
- Double click the center button to confirm or long press the center button to return to the main menu.

### 9.3.12. Reset Default

***With this function, you can select restore factory set for ON or OFF, the default is OFF.***

- Double clicking center button to access main menu.
- Tap the ‹Up/Down› button until "Options" is displayed.
- Double clicking center button to access "Options". Tap the ‹Up/Down› button to select "Reset Default".
- Double clicking center button to access "Reset Default" menu. The display will show "OFF". Tap the ‹Up/Down› button to select "ON".
- Double click the center button to confirm or long press the center button to return to the main menu.

### 9.3.13. Reset User

***Allows you to set default User settings***

**Address**

- Double clicking center button to access main menu.
- Tap the ‹Up/Down› button until "Options" is displayed.
- Double clicking center button to access "Options". Tap the ‹Up/Down› button to select "Reset User".
- Double clicking center button to access "Reset User" menu. Tap the ‹Up/Down› button to select "Address".
- Double clicking center button to access "Address". The display will show "001~XXX".
- Double click the center button to confirm or long press the center button to return to the main menu.

**Mode**

- Double clicking center button to access main menu.
- Tap the ‹Up/Down› button until "Options" is displayed.
- Double clicking center button to access "Options". Tap the ‹Up/Down› button to select "Reset User".
- Double clicking center button to access "Reset User" menu. Tap the ‹Up/Down› button to select "Mode".
- Double clicking center button to access "Mode". The display will show "Extend Mode".
- Tap the ‹Up/Down› button to select "Basic mode", "Stand Mode", "User Mode A", "User Mode B" and "User Mode C".
- Double click the center button to confirm or long press the center button to return to the main menu.

**Fans Speed**

- Double clicking center button to access main menu.
- Tap the ‹Up/Down› button until "Options" is displayed.
- Double clicking center button to access "Options". Tap the ‹Up/Down› button to select "Reset User".
- Double clicking center button to access "Reset User" menu. Tap

the ‹Up/Down› button to select "Fans Speed".

- Double clicking center button to access "Fans Speed". The display will show "Auto". Tap the ‹Up/Down› button to select "Stage", "Silence", "Super Silence".
- Double click the center button to confirm or long press the center button to return to the main menu.

**Constant Fans**

- Double clicking center button to access main menu.
- Tap the ‹Up/Down› button until "Options" is displayed.
- Double clicking center button to access "Options". Tap the ‹Up/Down› button to select "Reset User".
- Double clicking center button to access "Reset User" menu. Tap the ‹Up/Down› button to select "Constant Fans".
- Double clicking center button to access "Constant Fans". The display will show "OFF". Tap the ‹Up/Down› button to select "ON".
- Double click the center button to confirm or long press the center button to return to the main menu.

## 9.4 INFO

### 9.4.1. Time Info.

**Current Time**

***With this function, you can display the temporary running time of the device from the last power on. The display shows "XXXX", "XXXX" stands for the number of hours. The counter is reset after turning the device off.***

- Double clicking center button to access main menu.
- Tap the ‹Up/Down› button until "Info" is displayed.
- Double clicking center button to access "Info". Tap the ‹Up/Down› button to select "Time Info.".
- Double clicking center button to access "Time Info.". Tap the ‹Up/Down› button to select "Current Time".
- Double clicking center button to access "Current Time". The display will show "XXXX (Hours)".
- Double click the center button to confirm or long press the center button to return to the main menu.

**Ttl Life Hrs**

***With this function, you can display the running time of the device. The display shows "XXXX". "XXXX" stands for the number of hours.***

- Double clicking center button to access main menu.
- Tap the ‹Up/Down› button until "Info" is displayed.
- Double clicking center button to access "Info". Tap the ‹Up/Down› button to select "Time Info.".
- Double clicking center button to access "Time Info.". Tap the ‹Up/Down› button to select "Ttl Life Hrs".
- Double clicking center button to access "Ttl Life Hrs". The display will show "XXXX (Hours)".
- Double click the center button to confirm or long press the center button to return to the main menu.

**Last Run Hrs**

***With this function, you can display last the running time of the device. The display shows "XXXX". "XXXX" stands for the number of hours.***

- Double clicking center button to access main menu.
- Tap the ‹Up/Down› button until "Info" is displayed.
- Double clicking center button to access "Info". Tap the ‹Up/Down› button to select "Time Info.".
- Double clicking center button to access "Time Info.". Tap the ‹Up/Down› button to select "Last Run Hrs".
- Double clicking center button to access "Last Run Hrs". The display will show "XXXX (Hours)".
- Double click the center button to confirm or long press the center button to return to the main menu.

**LED Hours**

***With this function, you can display the time of LED. The display shows "XXXX". "XXXX" stands for the time of LED.***

- Double clicking center button to access main menu.
- Tap the ‹Up/Down› button until "Info" is displayed.
- Double clicking center button to access "Info". Tap the ‹Up/Down› button to select "Time Info.".
- Double clicking center button to access "Time Info.". Tap the ‹Up/Down› button to select "LED Hours".
- Double clicking center button to access "LED Hours". The display will show "XXXX (Hours)".
- Double click the center button to confirm or long press the center button to return to the main menu.

**Timer PIN**

***With this function, you can display the timer password.***

- Double clicking center button to access main menu.
- Tap the ‹Up/Down› button until "Info" is displayed.
- Double clicking center button to access "Info". Tap the ‹Up/Down› button to select "Time Info.".
- Double clicking center button to access "Time Info.". Tap the ‹Up/Down› button to select "Timer PIN".
- Double clicking center button to access "Timer PIN". The display will show "Password=038".
- Double click the center button to confirm or long press the center button to return to the main menu.

**Clr Last Run**

***With this function, you can clear last run time of the fixture. The display shows "ON" or "OFF".***

- Double clicking center button to access main menu.
- Tap the ‹Up/Down› button until "Info" is displayed.
- Double clicking center button to access "Info". Tap the ‹Up/Down› button to select "Time Info.".
- Double clicking center button to access "Time Info.".Tap the ‹Up/Down› button to select "Clear Last Run".
- Double clicking center button to access "Clear Last Run". The display will show "OFF". Tap the ‹Up/Down› button to select "ON".
- Double click the center button to confirm or long press the center button to return to the main menu.

### 9.4.2. Temp.Info

***With this function you can display the temperature on the display board of the base (near CMY-filter) in Celsius.***

- Double clicking center button to access main menu.
- Tap the ‹Up/Down› button until "Info" is displayed.
- Double clicking center button to access "Info". Tap the ‹Up/Down› button to select "Temp Info".
- Double clicking center button to access "Time Info.". The display will show "XXX °C/ °F".
- Double click the center button to confirm or long press the center button to return to the main menu.

### 9.4.3. Humidity

- Double clicking center button to access main menu.
- Tap the ‹Up/Down› button until "Info" is displayed.
- Double clicking center button to access "Info". Tap the ‹Up/Down› button to select "Humidity".
- Double clicking center button to access "Humidity". The display will show "x%".
- Double click the center button to confirm or long press the center button to return to the main menu.

### 9.4.4. Fan Info.

***With this function. you can display the fans speed of the unit.***

- Double clicking center button to access main menu.
- Tap the ‹Up/Down› button until "Info" is displayed.
- Double clicking center button to access "Info". Tap the ‹Up/Down› button to select "Fan Info.".
- Double clicking center button to access "Fan Info.". The display will

show "xxxxRPM".

- Double click the center button to confirm or long press the center button to return to the main menu.

#### 9.4.5. Software Ver

***With this function. you can display the software version of the device.***

- Double clicking center button to access main menu.
- Tap the <Up/Down> button until "Info" is displayed.
- Double clicking center button to access "Info". Tap the <Up/Down> button to select "Software Ver".
- Double clicking center button to access "Software Ver". The display will show "Ver x.x.x".
- Double click the center button to confirm or long press the center button to return to the main menu.

#### 9.4.6. Network

- Double clicking center button to access main menu.
- Tap the <Up/Down> button until "Info" is displayed.
- Double clicking center button to access "Info". Tap the <Up/Down> button to select "Network".
- Double clicking center button to access "Network". The display will show "IP" . Turn the center button to select "Mask". "Mac".
- Double click the center button to confirm or long press the center button to return to the main menu.

#### 9.4.7. Error Info

- Double clicking center button to access main menu.
- Tap the <Up/Down> button until "Info" is displayed.
- Double clicking center button to access "Info". Tap the <Up/Down> button to select "Error Info".
- Double clicking center button to access "Error Info". The display will show "Error Record 1" . "……". "Error Record 10".
- Double click the center button to confirm or long press the center button to return to the main menu.

#### 9.4.8. SN

- Double clicking center button to access main menu.
- Tap the <Up/Down> button until "Info" is displayed.
- Double clicking center button to access "Info". Tap the <Up/Down> button to select "SN".
- Double clicking center button to access "SN". The display will show the serial number "xxxxx" . "……".
- Double click the center button to confirm or long press the center button to return to the main menu.

## 9.5 TEST

#### 9.5.1. Home

***With this function you can reset the device via the buttons. You can select the different reset functions using the buttons.***

- Double clicking center button to access main menu.
- Tap the <Up/Down> button until "Test" is displayed.
- Double clicking center button to access "Test". Tap the <Up/Down> button to select "Home".
- Double clicking center button to access "Home". The display will show "All" . Tap the <Up/Down> button to select "All". "Pan&Tilt". "ZOOM".
- Double click the center button to confirm or long press the center button to return to the main menu.

#### 9.5.2. Test Channel

***With this function you can test each channel's function to ensure correct operation.***

- Double clicking center button to access main menu.
- Tap the <Up/Down> button until "Test" is displayed.
- Double clicking center button to access "Test". Tap the <Up/Down> button to select "Test Channel".
- Double clicking center button to access "Test Channel". The display will show "Pan".
- Tap the <Up/Down> button to select other channel.
- Double click the center button to confirm or long press the center button to return to the main menu.

#### 9.5.3. Manual Control

***Allows you to manually control each feature of the unit.***

- Double clicking center button to access main menu.
- Tap the <Up/Down> button until "Test" is displayed.
- Double clicking center button to access "Test". Tap the <Up/Down> button to select "Manual control".
- Double clicking center button to access "Manual control". The display will show "PAN=XXX".
- Double click the center button to confirm or long press the center button to return to the main menu.

#### 9.5.4. Calibration

***With this function. you can calibrate and adjust the effect wheels to their correct positions. The password of calibrate values is 050.***

- Double clicking center button to access main menu.
- Tap the <Up/Down> button until "Test" is displayed.
- Double clicking center button to access "Test". Tap the <Up/Down> button to select "Calibration".
- Double clicking center button to access "Calibration" . The display will show "Password=050".
- Double click the center button to confirm or long press the center button to return to the main menu.

## 9.6 PRESET

- Double clicking center button to access main menu.
- Tap the <Up/Down> button until "Preset" is displayed.
- Double clicking center button to access "Preset". Tap the <Up/Down> button to select "Select prog.". "Edit prog.". "Edit Scenes". "Scenes Input".
- Double click the center button to confirm or long press the center button to return to the main menu.

Run the auto program: A main fixture can output to three different program signals to the follow fixture to operate. It means the host will send cyclically in the following orders. (The host will keep operating the program of Part 1). Then the follow fixture will make the selectively receiving according to its own set.

- If the follow fixture chooses Run For Follow 1 from the menu of 1-3,then it will receive the part 1's automatic program from link, in the same way, when the follow fixture chooses Run For Follow 2, then it will receive the part 2's automatic program from link.
- Enter the menu of 1-3 Function Mode---Set To Follow. Here to set machine operate which part of the program during the host-follow connection
- Enter the menu of 1-4, 1-5 Function Mode---Set To Main
- Enter the menu of 8-1 Edit Program---Auto Program Part1. The host outputs three groups driven program---Part1, Part2, Part3 (Part1 program runs the same effect as the host)
- Enter the menu of 8-2 Edit Program---Edit Program. Edit the program's connection, connect the scene in order
- The editor of the scene, there are as many as 250 scenario editors, and every scene can have a program connection of 10.

***Note:***
***Part 2, Part 3 repeat in accordance with the Part1's repeat. For example: When Part 1 uses Program 2, Part 2 uses Program 4, Part 3 uses Program 6, Assume:Program 2 includes scene of 10, 11, 12, 13. Program 4 includes scene of 8, 9, 10; Program 6 includes scene of 12, 13, 14, 15. Then it will run as below.***

*Example:*

**Part 1:**

| | | | |
|---|---|---|---|
| Scene 10 | Scene 11 | Scene 12 | Scene 13 |

**Part 2:**

| | | | |
|---|---|---|---|
| Scene 8 | Scene 9 | Scene 10 | Scene 8 |

**Part 3:**

| | | | |
|---|---|---|---|
| Scene 12 | Scene 13 | Scene 14 | Scene 15 |

## 10. NFC

When the fixture is powered on, you can use a NFC smartphone installed with the Ayrton App to scan the NFC tag area of the fixture to read some of the information or settings inside the display menu, such as product name, software version, UID, DMX Start Address, Universe, User Mode, Options, Information, etc. You can also change some of the settings and push to write inside the fixture menu.

When the fixture is not powered on, you can still use the App to read the NFC info and write the settings into the NFC tag, the written data will be automatically synchronized into the fixture menu at next time the fixture is powered on.

Link to download the application: https://qrstud.io/ayrtonnfc

*Note:*

- ***Before using, make sure there is NFC function on your smartphone and it is activated. Download and install the Ayrton App;***
- ***The NFC tag on the fixture is right under the LCD window;***
- ***The NFC reader area vary on different smartphones, identify the correct area on your smartphone before scanning the NFC tag on the fixture;***
- ***When scanning, make sure the NFC reader area of your smartphone close enough to the LCD window and hold still the smartphone for 3 seconds until reading successfully***

## 11. DMX PROTOCOL

***Scan the QR code on the cover page to download the DMX CHART.***

## 12. ERROR MESSAGES

When you turn on the device, it will first perform a reset. The display may show "Err channel is XX" should there be problems with one or more functions. "XX" stands for channel 1, 2, 3, 4, 5, 6 etc whose sensor has encountered a problem. For example, when the display shows "Err channel is Pan movement", it means there is an error on channel 1. If there are errors on channel 1, channel 3, channel 12 at the same time, you may see the error message, "Err channel is Pan movement", "Err channel is Tilt movement", "Err channel is Shutter", flash twice, and then the device will generate a second reset. If the error messages persist after performing a reset more than twice, the channels which have errors may not work properly however, all other functions can work as usual. Please contact your dealer or manufacturer for service. Self repair is not allowed.

**PAN- movement Er**

(PAN- movement error) This message will appear after the reset of the fixture if the yoke's magnetic-indexing circuit malfunction (Optical Sensor or Magnetic Sensor fails) or the stepper motor is defective (or its driving IC on the main PCB). The PAN- movement is not located in the default position after the reset.

**TILT- movement Er**

(TILT- movement error) This message will appear after the reset of the fixture if the head's magnetic-indexing circuit malfunctions (Optical Sensor or Magnetic Sensor fails) or the stepper motor is defective (or its driving IC on the main PCB). The TILT- movement is not located in the default position after the reset.

**Zoom wheel Er**

(Zoom wheel error) This message will appear after the reset of the fixture if the head's magnetic-indexing circuit malfunctions (Optical Sensor or Magnetic Sensor fails) or the stepper motor is defective (or its driving IC on the main PCB). The Zoom - movement is not located in the default position after the reset.

## 13. CLEANING AND MAINTENANCE

**CAUTION**

| | |
|---|---|
| | Disconnect from mains before starting maintenance operation |
| | Do not place the fixture with its lens/glass facing any people while doing the IP test! |
| | Never use alcohol or solvent to clean the lenses. |
| Ayrton IP Kit | Always run an IP test using the Ayrton IP test kit following any maintenance operation! Failure to comply with this clause will void the warranty!<br><br>The operator must follow strictly the vacuum and pressure setting values as below, or use the corresponding preset fixture menu to run the IP test. any overpressure operation may cause accidental damage or injury. |

| | Minimum value | | Maximum value | | Steady time (Hold time) |
|---|---|---|---|---|---|
| | Kpa | Psi | Kpa | Psi | S |
| Vacuum | -30 | -4.35 | -35 | 5.08 | 10 |
| Pressure | 25 | 3.63 | 30 | 4.35 | 10 |

***NOTE: When using external equipment to test air tightness, air can only be filled and extracted from the exhaust hole of the bottom base, not from the exhaust hole of the fixture head. Once the covers removed and before set them back, check the cover gasket to avoid any leak due to gasket damage. Cross tightening the die-casting covers HEX screws at the right torque value.***

***Use a Torque Screwdriver set at 14Kgf.cm (1.4 Nm) for metal cover or 7Kgf.cm (0.7 Nm) for plastic cover.***

***The following points have to be considered during inspection:***

- ***All screws for installing the devices or parts of the device have to be tightly connected and must not be corroded.***
- ***There must not be any deformations to the housing, lenses, rigging and installation points (ceiling, suspension, trussing).***
- ***Motorized parts must not show any signs of wear and must move smoothly without issue.***
- ***The power supply cables must not show any damage, material fatigue or sediment.***

**Checking and replacing the desiccant**

The desiccant is used as humidity indication in the fixture. Dry desiccant is in blue color, if it is saturated with water, its color changes to light red. If the desiccant color changes to pink, the desiccant is losing efficacy, it must be replaced.

CAUTION

**Unplug the fixture from mains before checking or replacing desiccant!**

**Do not check or replace desiccant in a damp environment!**

Further instructions depending on the installation location and usage have to be adhered to by a qualified installer and any safety concerns have to be removed. We recommend frequent cleaning of the device. Please use a moist, lint-free cloth. Never use alcohol or solvents. Please refer to the instructions under "Installation instructions".
Should you need any spare parts, please order genuine parts from your local dealer.

AYRTON

Digital Lighting

SCAN FOR MORE

ayrton.eu

2 Rue de Vitruve - 91140 - Villebon-sur-Yvette-France